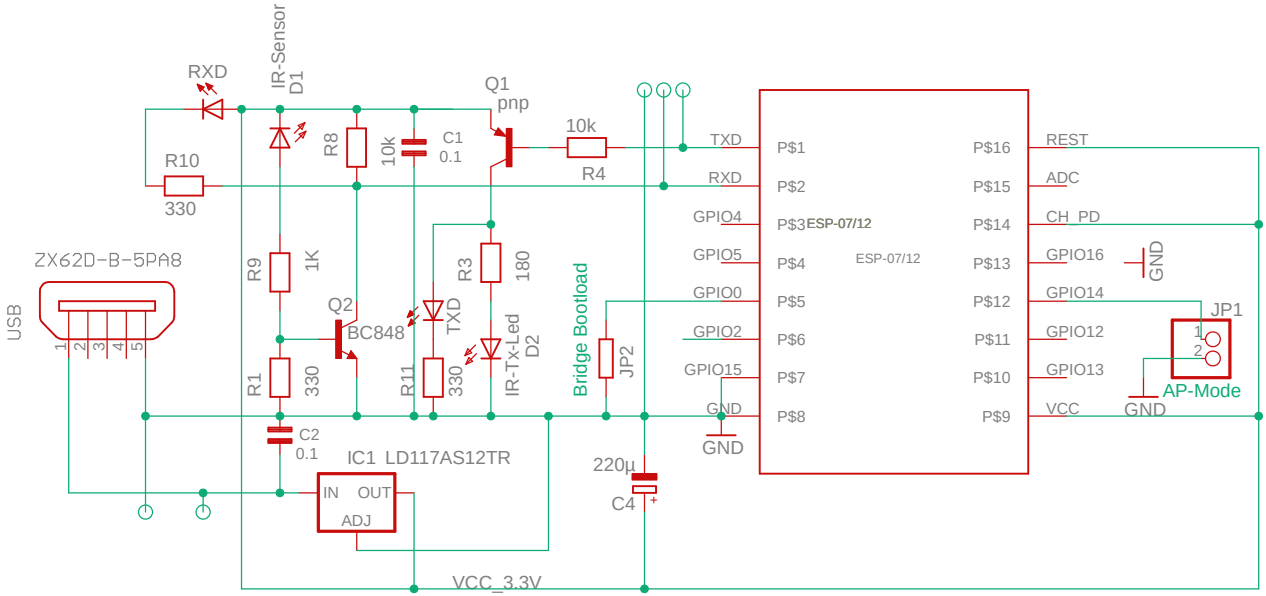
RXD
IR-Sensor
D1
R10
330
R8
10k
C1
0.1
Q1
pnp
10k
R4
TXD
RXD
GPIO4
GPIO5
GPIO0
GPIO2
GPIO15
GND
P$1
P$2
P$3
P$4
P$5
P$6
P$7
P$8
ESP-07/12
ESP-07/12
P$16
P$15
P$14
P$13
P$12
P$11
P$10
P$9
REST
ADC
CH_PD
GPIO16
GPIO14
GPIO12
GPIO13
VCC
GND
JP1
AP-Mode
GND
ZX62D-B-5PA8
USB
1
2
3
4
5
R9
1K
Q2
BC848
R1
330
C2
0.1
R3
180
TXD
R11
330
IR-TX-Led
D2
Bridge Bootload
JP2
IC1 LD117AS12TR
IN
OUT
ADJ
220µ
C4
VCC_3.3V